STAGE I CURB INLET

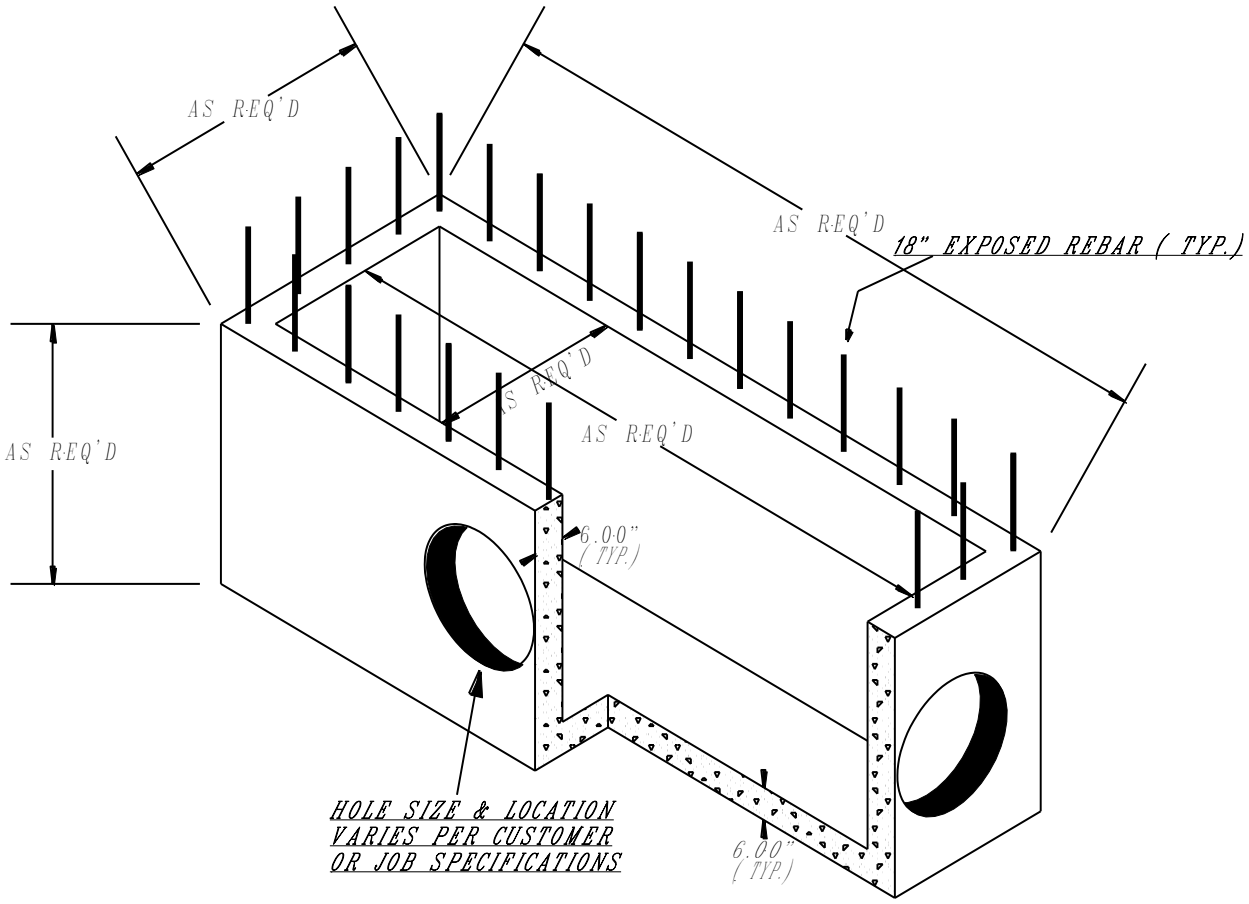

ALL CURB INLETS LEFT APPROX. 18" SHORT W/ 18" EXPOSED REBAR AT TOP. TOPS AND REST OF WALLS TO BE POURED IN THE FIELD.

MFG.PER ASTM C478---4000 # REINFORCED CONCRETE IN 28 DAYS

SIDE WALLS TO BE CONSTRUCTED W/ 1/2" GRADE 60 REBAR ON 8" CENTERS BOTH WAYS W/ 18" EXPOSED @ TOP.

FLOOR TO BE CONSTRUCTED W/ 1/2" GRADE 60 REBAR ON 8" CENTERS BOTH WAYS.

DATE: 8/1/06 SCALE: NOT TO SCALE

TYLER PRODUCTS SALES, INC.
TPS
PRE-CAST CONCRETE PRODUCTS
www.tylerproductssales.com
PH. 903-593-8633
FAX 903-593-8862